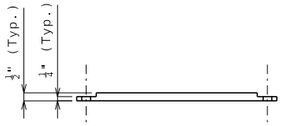

ELEVATION OF GALVANIZED STEEL STOPPER PLATE

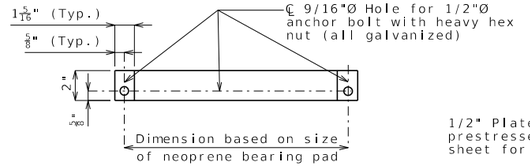

PLAN OF GALVANIZED STEEL STOPPER PLATE

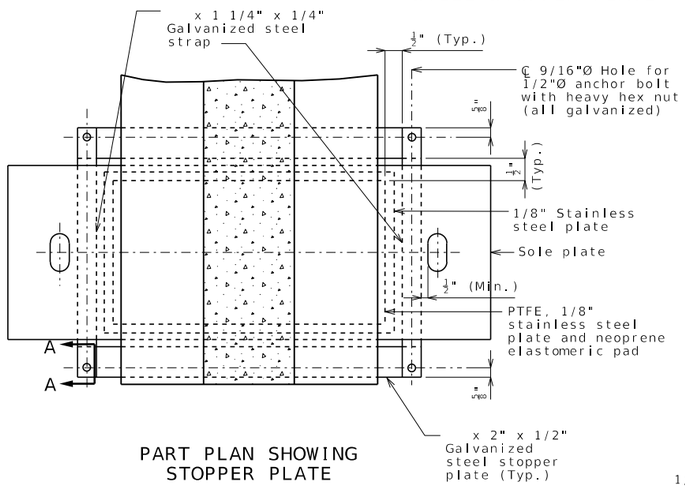

PART PLAN SHOWING STOPPER PLATE

Stopper plates and straps shall be provided to prevent loss of support due to creeping of PTFE bearings. Payment for fabricating and installing the stopper plates and straps will be considered completely covered by the contract unit price for Type N PTFE Bearing.

The bottom face of the 1/8" stainless steel plate that is welded to the sole plate shall be lubricated with a lubricant that is approved by the bearing manufacturer.

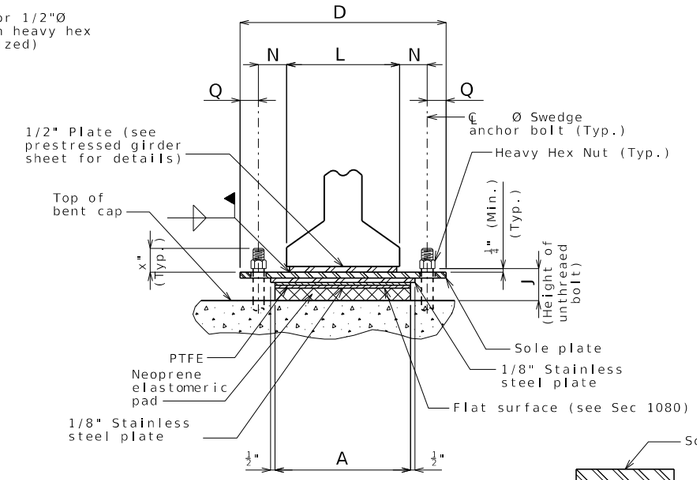

END VIEW

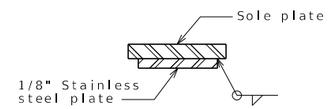

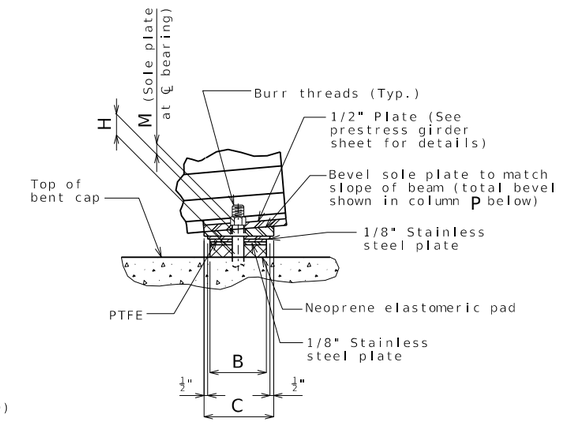

SIDE VIEW

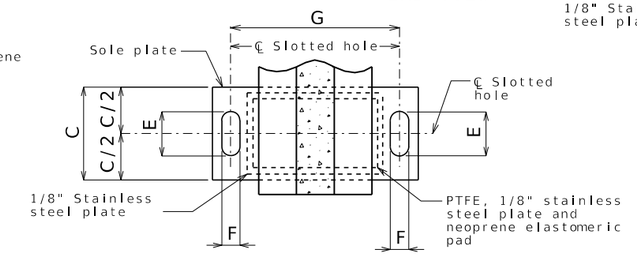

PART PLAN

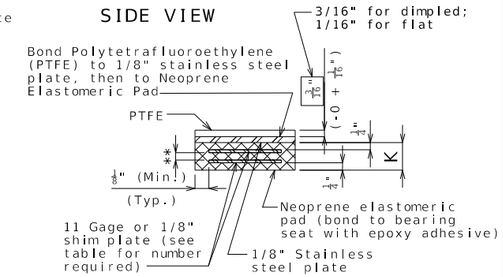

NEOPRENE ELASTOMERIC PAD

** Layers of 1/2" elastomeric pad alternating with 11 gage or 1/8" shim plate

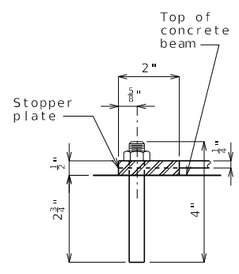

SECTION A-A

PTFE SLIDING BEARINGS																		
BENT NO.	A	B	C	D	E	F	G	H	J	K	L	M	N	P	Q	R	NUMBER OF SHIM PLATES *	NUMBER REQUIRED
																	TOTAL BEARINGS	

* The required shim plate shall be placed between layers of elastomer and molded together to form an integral unit.

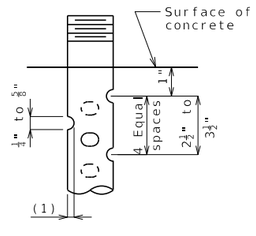

DETAIL FOR 3/4"Ø THRU 2 1/2"Ø ANCHOR BOLTS

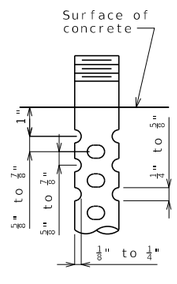

OPTIONAL DETAIL FOR 1 3/8"Ø THRU 2 1/2"Ø ANCHOR BOLTS

SWEDGE ANCHOR BOLT DETAILS

(1) 1/8" for 3/4"Ø thru 1 1/4"Ø anchor bolts

1/8" to 1/4" for 1 3/8"Ø thru 2 1/2"Ø anchor bolts

GENERAL NOTES:

Design coefficient of friction equals .

Anchor bolts shall be Ø ASTM F1554 Grade 55 105 swedged bolts and shall extend into the concrete with ASTM A563 Grade A DH Heavy Hex nuts. Actual manufacturer's certified mill test reports (chemical and mechanical) shall be provided. Swedging shall be 1" less than extension into the concrete.

Anchor bolt shall be at the centerline of slotted hole at 60°F. Bearing position shall be adjusted for each 10° fall or rise in temperature at installation.

R

Anchor bolts and heavy hex nuts shall be coated with a minimum of two coats of inorganic zinc primer to provide a total dry film thickness of 4 mils minimum, 6 mils maximum, or galvanized in accordance with AASHTO M 232 (ASTM A153), Class C.

Neoprene Elastomeric Pads shall be 70 Durometer.

Structural steel for sole plate shall be ASTM A709 Grade and shall be coated with a minimum of two coats of inorganic zinc primer to provide a total dry film thickness of 4 mils minimum, 6 mils maximum. The stainless steel plate shall be protected from any coating.

Type N PTFE Bearings shall be in accordance with Sec 716.

PTFE surface shall be fabricated as a single piece. Splicing will not be permitted.

The PTFE surface shall be flat dimpled.

The depth of the dimples shall be at least 0.08 inch but less than one-half the PTFE thickness and the diameter shall be no more than 0.32 inch. Dimples shall be uniformly distributed and cover greater than 20% but less than 30% of the entire PTFE surface area. Dimples shall not be placed to intersect the edge of the PTFE surface.

Dimpled PTFE surfaces shall be lubricated with silicone grease meeting the Society of Automotive Engineers Specification SAE-AS8660.

Remove these notes if PTFE surface is flat.

TYPE N PTFE BEARINGS

Detailed
Checked

Note: This drawing is not to scale. Follow dimensions.

Sheet No. of

DATE PREPARED	
1/30/2025	
ROUTE	STATE MO
DISTRICT BR	SHEET NO. 4
COUNTY	
JOB NO.	
CONTRACT ID.	
PROJECT NO.	
BRIDGE NO.	

DESCRIPTION

DATE

MISSOURI HIGHWAYS AND TRANSPORTATION COMMISSION
105 WEST CAPITOL
JEFFERSON CITY, MO 65102
1-888-ASK-MODOT (1-888-275-6636)