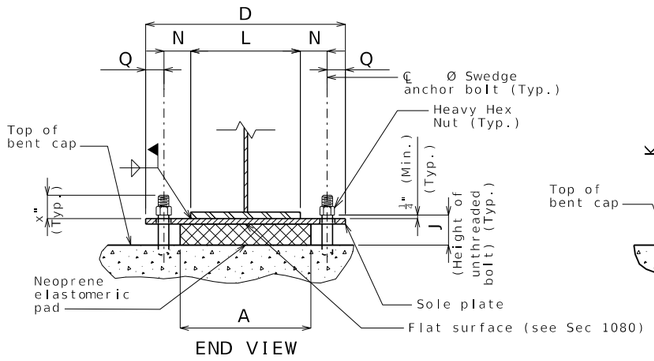

END VIEW

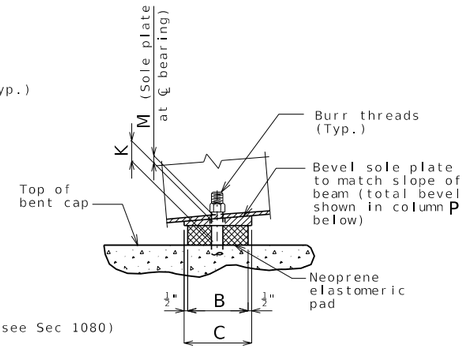

SIDE VIEW

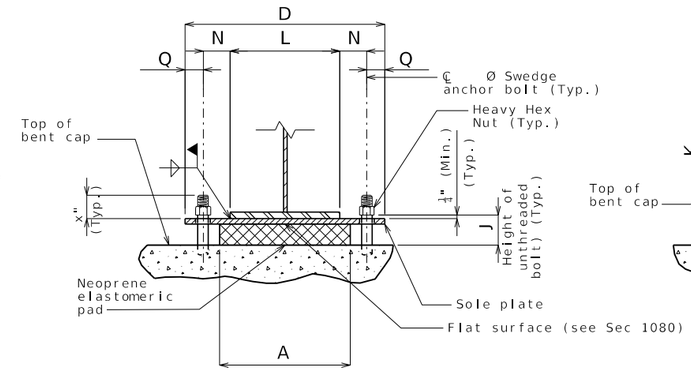

END VIEW

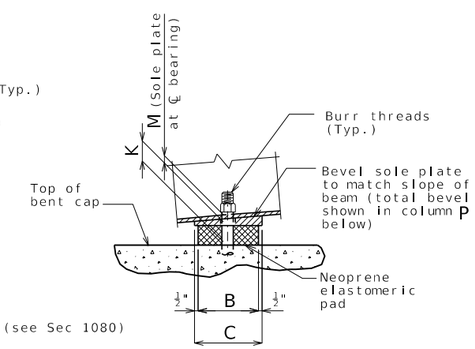

SIDE VIEW

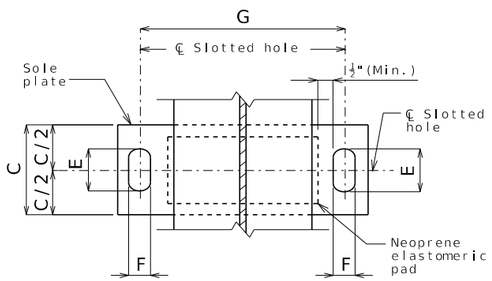

PART PLAN

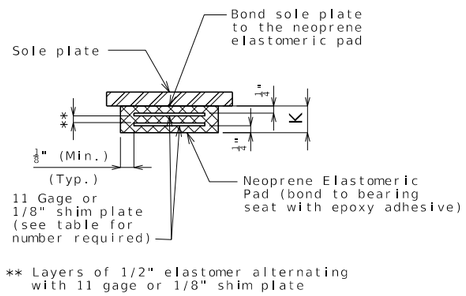

NEOPRENE ELASTOMERIC PAD

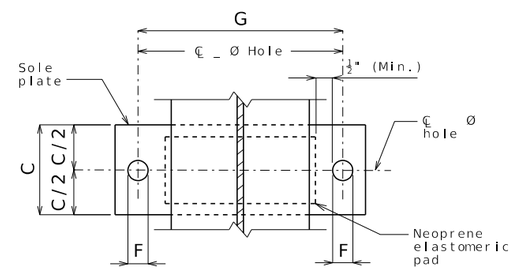

PART PLAN

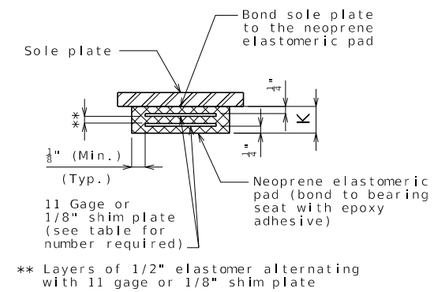

NEOPRENE ELASTOMERIC PAD

EXPANSION BEARINGS																	
BENT NO.	A	B	C	D	E	F	G	J	K	L	M	N	P	Q	R	NUMBER OF SHIM PLATES *	NUMBER REQUIRED
																TOTAL BEARINGS	

* The required shim plate shall be placed between layers of elastomer and molded together to form an integral unit.

FIXED BEARINGS																	
BENT NO.	A	B	C	D	F	G	J	K	L	M	N	P	Q			NUMBER OF SHIM PLATES *	NUMBER REQUIRED
																TOTAL BEARINGS	

* The required shim plate shall be placed between layers of elastomer and molded together to form an integral unit.

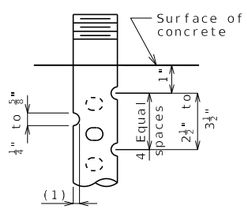

DETAIL OF 3/4"Ø THRU 2 1/2"Ø ANCHOR BOLTS

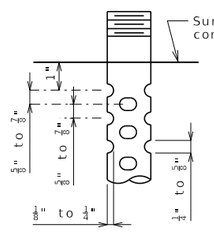

OPTIONAL DETAIL OF 1 3/8"Ø THRU 2 1/2"Ø ANCHOR BOLTS

Standard Drawing Guidance:
(do not show on plans.)

① Use note H3.49.1 with Grade 50W steel.
Use note H3.49.2 when steel superstructure is galvanized.
(H3.49 shown)

② Remove underlined portion when steel superstructure is galvanized.

SWEDGE ANCHOR BOLT DETAILS

(1) 1/8" for 3/4"Ø thru 1 1/4"Ø anchor bolts

1/8" to 1/4" for 1 3/8"Ø thru 2 1/2"Ø anchor bolts

GENERAL NOTES:

Anchor bolts shall be Ø ASTM F1554 Grade 55 105 swedged bolts and shall extend into the concrete with ASTM A563 Grade A DH Heavy Hex nuts. Actual manufacturer's certified mill test reports(chemical and mechanical) shall be provided. Swedging shall be 1" less than extension into the concrete.

Anchor bolt shall be at the centerline of slotted hole at 60°F. Bearing position shall be adjusted R for each 10° fall or rise in temperature at installation.

② Anchor bolts and heavy hex nuts shall be coated with a minimum of two coats of inorganic zinc primer to provide a total dry film thickness of 4 mils minimum, 6 mils maximum, or galvanized in accordance withwith AASHTO M 232 (ASTM A153), Class C.

Neoprene Elastomeric Pads shall be Durometer.

① Structural steel for sole plate shall be ASTM A709 Grade and shall be coated with a minimum of two coats of inorganic zinc primer to provide a total dry film thickness of 4 mils minimum, 6 mils maximum.

Laminated Neoprene Bearing Pad Assembly shall be in accordance with Sec 716.

LAMINATED NEOPRENE BEARING PAD ASSEMBLY

Detailed
Checked

Note: This drawing is not to scale. Follow dimensions.

Sheet No. of

DATE PREPARED	
1/30/2025	
ROUTE	STATE MO
DISTRICT	SHEET NO. 8
COUNTY	
JOB NO.	
CONTRACT ID.	
PROJECT NO.	
BRIDGE NO.	

DESCRIPTION

DATE

MISSOURI HIGHWAYS AND TRANSPORTATION COMMISSION

105 WEST CAPITOL
JEFFERSON CITY, MO 65102
1-888-ASK-MODOT (1-888-275-6636)