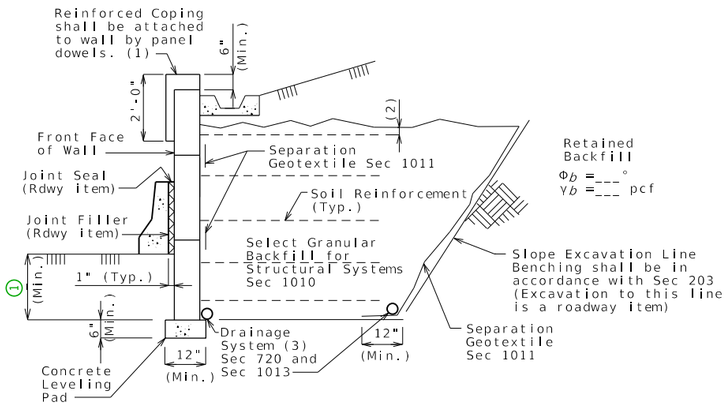

TYPICAL SECTION THRU LARGE BLOCK WALL

Note: For additional information, see "TYPICAL SECTION THRU LARGE BLOCK WALL SHOWING FILTER CLOTH".

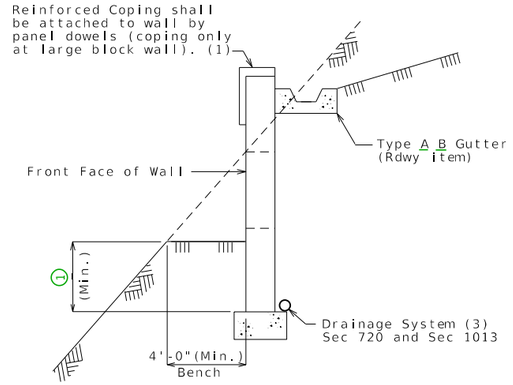

TYPICAL SECTION THRU MSE WALL FOUNDED ON SLOPE

Note:
A minimum horizontal bench 4'-0" wide shall be provided in front of the wall

Note:

Holes shall be 5/8" round and extended 4" into the third layer of blocks, recessed 2" deep by 1 1/2" round.

Rods or reinforcing bars shall be secured by an approved resin anchor system in accordance with Sec 1039.

Recess hole shall be backfilled with non-shrink cement grout.

(1) Inverted U-shape reinforced capstone may be used in lieu of coping. Panel dowels for level-up concrete shall be required and provided by manufacturer. The dowels shall be field trimmed to clear the capstone by a minimum of 1 1/2 inches and a maximum of 2 1/2 inches.

(2) Topmost layer of reinforcement shall be fully covered with select granular backfill for structural systems, as approved by the wall manufacturer, before placement of the Separation Geotextile.

(3) Minimum (2) diameter perforated PVC or PE pipe.

Manufacturer shall show drain details on design plans to be submitted as shown on MoDOT MSE wall plans and/or roadway plans.

Contractor shall modify the drain details as shown if it will improve flow as may be the case for stepped leveling pad, and for an uneven ground line (approval of the engineer required).

Permanent shims for Small block MSE wall:
Shims will be sparingly allowed to maintain horizontal and vertical control. The preferable shim shall be made of a plastic material that will not rust, stain, rot or leach onto the concrete and has a minimum compressive strength equal to block wall unit. Steel or wood shims will not be allowed. Shims shall not exceed 3/16" in thickness and shall distribute load in order to not induce stress into block wall units. No shim shall be used between the concrete leveling pad and the base course of the block wall.

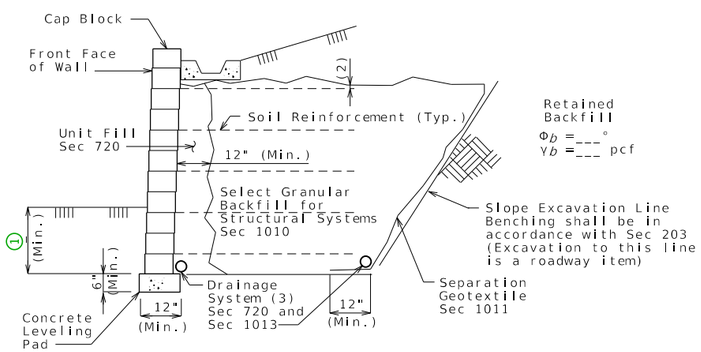

TYPICAL SECTION THRU SMALL BLOCK WALL

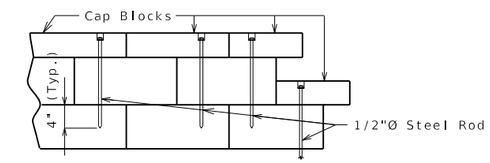

WALL PROFILE

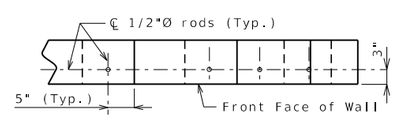

WALL PLAN

(Small Block Wall)

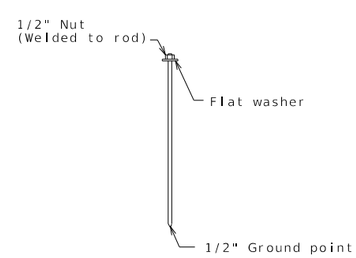

DETAILS OF 1/2" THREADED ROD OR REINFORCING ROD

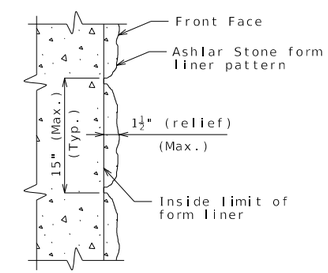

FORM LINER DETAIL
(Large Block Wall)

Notes:

The cost of form liners for MSE wall systems, complete in place, will be considered completely covered by the contract unit price for Mechanically Stabilized Earth Wall System.

Form liner shall be constructed in accordance with Special Provisions.

The following is a list of form liner manufacturers and types which may be used. Depth of relief for all form liner pattern's shall vary up to 1 1/2". The height of any single 'stone' shall be 15" maximum.

- Scott System, Inc.: Form liner pattern #167 "Ashlar Stone"
- Fitzgerald Formliners: Form liner pattern #16986 "Ashlar Stone"
- Greenstreak: Form liner pattern #330 "Ashlar Stone"
- Spec Formliners: Form liner pattern #1515 "Ashlar Stone"
- Customrock: Form liner pattern #12020 "Tollway Ashlar"
- An approved equal

Standard Drawing Guidance (do not show on plans):

Revise notes and details per project as necessary.

Note (1) does not apply to Small Block Walls.

See EPG 751.24.2.1 for drainage guidance.

(1) Show the minimum embedment = maximum (2 feet; embedment based on Geotechnical Report and global stability requirements; and FHWA-NHI-10-024, Table 2-2).

(2) District Design Division to verify 6" diameter pipe or increase diameter. Minimum pipe diameter shall be 6".

DETAILS FOR GENERIC MSE WALL

Detailed
Checked

Note: This drawing is not to scale. Follow dimensions.

Sheet No. of

DATE PREPARED	
7/26/2024	
ROUTE	STATE MO
DISTRICT BR	SHEET NO. 000
COUNTY	
JOB NO.	
CONTRACT ID.	
PROJECT NO.	
BRIDGE NO.	

DESCRIPTION	DATE

MISSOURI HIGHWAYS AND TRANSPORTATION COMMISSION
105 WEST CAPITOL
JEFFERSON CITY, MO 65102
1-888-ASK-MODOT (1-888-275-6636)